Technical Data Manual

Model Nos. and pricing : See Price List

VITOCROSSAL 200

Gas-fired Condensing Boiler
663 to 1112 MBH (194 to 326 kW)

Product may not be exactly as illustrated.

Vitocrossal 200

CM2 Series 186, 246, 311

High efficiency, gas-fired condensing boiler with pre-mix modulating cylinder burner
for natural gas or liquid propane gas with Inox-Crossal heat exchanger made of high-grade SA 240-316 Ti stainless steel.
For operation without low limit on boiler return water temperature.
For closed loop hot water heating systems with maximum supply water temperatures of 210° F (99° C) for a maximum operating pressure of 75 psig.

Heating input: 663 to 1112 MBH
(194 to 326 kW)

5608 012 - 02 06/2014

Vitocrossal 200

Benefits at a glance:

- Inox-Crossal heat exchanger surface made of high-grade SA 240-316 Ti stainless steel for high operational reliability and long service life.
  - Easy dispersal of condensate through vertical gas flues; therefore no concentration of condensate.
  - Increased self-cleaning effect through smooth stainless steel surfaces.
- Highly efficient heat transfer and high condensation rate through
  - heat exchanger surfaces which intensely turbulate the flue gas flow
  - boiler water and hot gases flowing in counterflow.
- Efficiency up to 98% through intensive condensation. The flue gas temperature is only approximately 9 - 27° F (5 - 15° C) above boiler return temperature (see chart below).
- Clean combustion - through perfect match of burner and boiler, low combustion chamber loading and straight-through combustion chamber.
- Easy handling in boiler rooms through particularly low build height and weight.
- Easy installation and elimination of wiring mistakes with Viessmann prewired plug-in system.
- Heating boiler, heating system control, domestic hot water storage tank and all other Viessmann system technology components are coordinated to one another.
  All components are design-matched for quick installation.
- Pre-mix cylinder burner for environmentally-friendly operation with a modulation range from 20 to 100%.
- All hydronic connections can be fitted from above.
- Economical and safe heating system operation through Vitotronic digital control system with communication capability. Tailored to every need, covering all known control strategies and applications.
  Standard LON BUS for complete integration into building management systems.
- Particularly quiet operation.
- High altitude operation up to 10,000 ft. (3000 m) with a simple electronic adjustment.

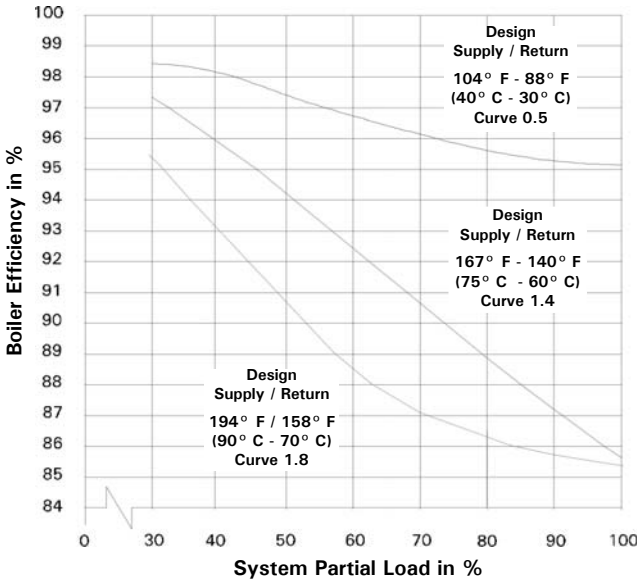

Vitocrossal 200 boiler efficiency dependent on system heating water return temperatures and load conditions

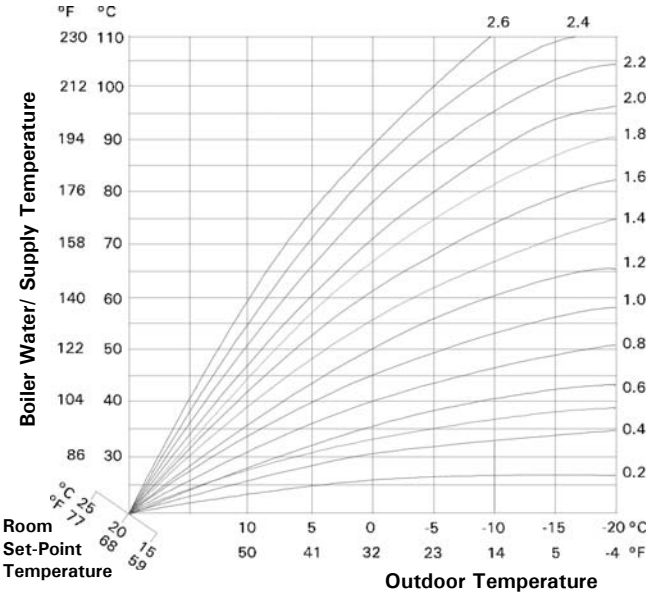

5608 012 - 02

Cutaway Section

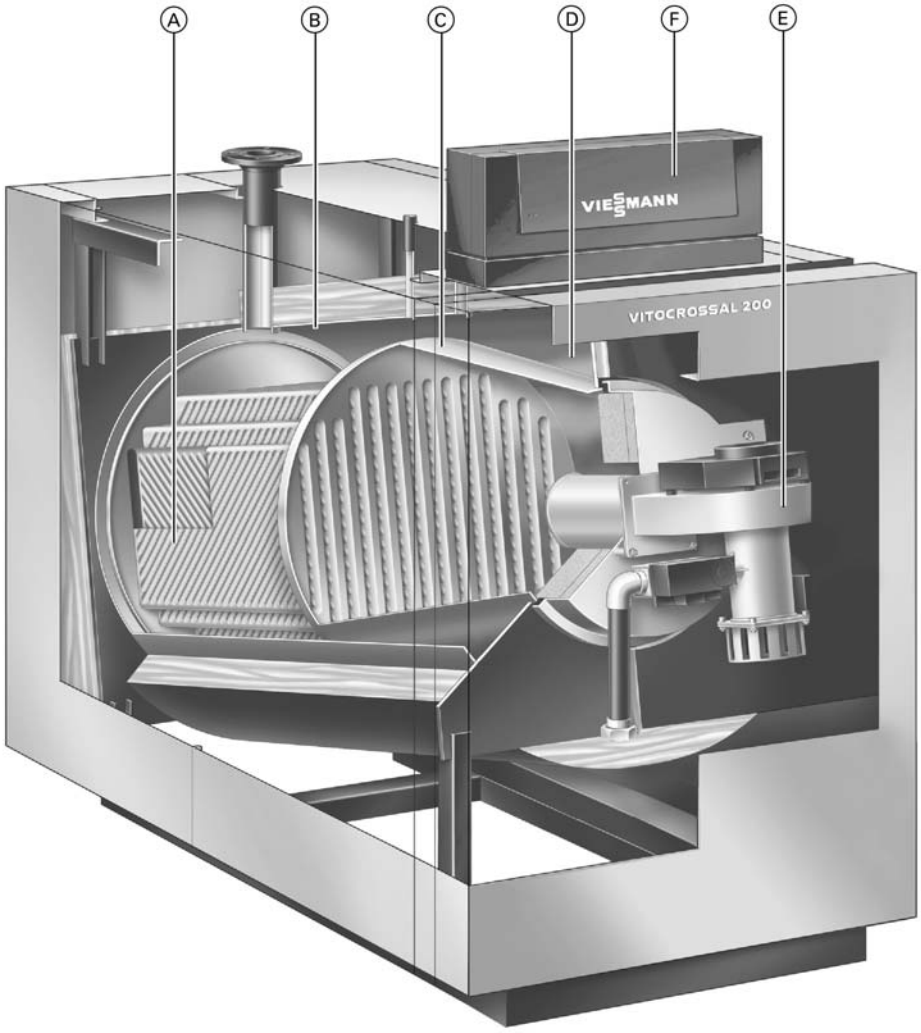

Legend

Ⓐ Inox-Crossal heat exchanger surface made from high-grade SA 240-316 Ti stainless steel
Ⓑ Highly effective thermal insulation
Ⓒ Water cooled stainless steel combustion chamber
Ⓓ Wide water passageways with low pressure drop - good natural circulation
Ⓔ Fully modulating pre-mix cylinder burner
Ⓕ Vitotronic control unit

Technical Data

Boiler Model	CM2	186	246	311
Input	MBH	663	878	1112
	(kW)	(194)	(257)	(326)
Minimum Input	MBH	133	175	222
	(kW)	(39)	(51)	(65)
Output *1	MBH	643	851	1078
	(kW)	(188)	(249)	(316)
Net AHRI rating	MBH	559	740	937
	(kW)	(164)	(217)	(275)
Combustion efficiency *1	%	95	95	95
Thermal efficiency *1	%	97	97	97
Overall length(e)	in.	73	73	73
	(mm)	(1852)	(1852)	(1852)
Overall width (c)	in.	36½	36½	36½
(including insulation)	(mm)	(930)	(930)	(930)
Overall height (a) *2	in.	66	66	66
(including control unit)	(mm)	(1676)	(1676)	(1676)
Concrete boiler base				
Length	in.	40	40	40
	(mm)	(1005)	(1005)	(1005)
Width	in.	31	31	31
	(mm)	(800)	(800)	(800)
Thickness	in.	4	4	4
	(mm)	(100)	(100)	(100)
Weight				
Boiler body	lb	503	536	564
	(Kg)	(228)	(243)	(256)
Complete with the burner, control	lb	726	759	792
and thermal insulation	(Kg)	(329)	(344)	(359)

*1 Tested to AHRI, BTS-2000 Testing Standard Method to Determine Efficiency of Commercial Heating Boilers.
*2 Add 1⅝ in. (40 mm) when using seismic mounts (optional accessory).

Note: For altitude operation up to 4,999 feet, derate the input capacity by 3%/1000 ft.
For operation from 5,000 to 10,000 feet, with the electronic altitude adjustment made, derate the input capacity by an additional 0.6%/1000 ft. for a total derate of 18%.

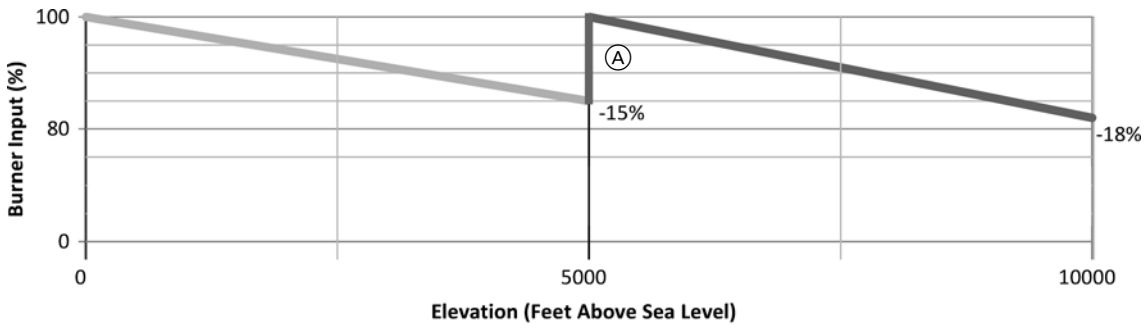

Ⓐ Input capacity after electronic altitude adjustment is made.

5608 012 - 02

Technical Data *(continued)*

Boiler Model	CM2	186	246	311
Boiler Water Content	USG	81	77	74
	(L)	(306)	(292)	(279)
Heat exchanger surface	ft.2	73.2	90.4	114.1
water cooled	(m2)	(6.8)	(8.4)	(10.6)
Maximum Operating Temperature	°F	190	190	190
	(°C)	(88)	(88)	(88)
Maximum Operating Pressure	psig	75	75	75
	(kpa)	(517)	(517)	(517)
Boiler Connections				
Boiler supply and return (BS), (BR)	in.	2½	2½	2½
(ANSI flanges)	(mm)	(65)	(65)	(65)
Safety Supply	in.	1¼	1¼	1¼
	(mm)	(32)	(32)	(32)
Boiler Drain	in.	1	1	1
Condensate Drain	in.	¾	¾	¾
Vent pipe				
Internal Diameter	in.	8	8	8
	(mm)	(201)	(201)	(201)
Flue Gas Values temperature (at a return temperature of 86° F (30° C)				
at rated input	°F	136	132	130
	(°C)	(58)	(55)	(54)
at partial load	°F	95	95	95
	(°C)	(35)	(35)	(35)
Temperature (at a return temperature of 140° F (60° C)				
at rated input	°F	167	167	167
	(°C)	(75)	(75)	(75)
Mass flow rate (of flue gas)				
at rated input	lbs/h	593	785	994
	(kg/h)	(269)	(356)	(451)
at partial load	lbs/h	198	262	331
	(kg/h)	(90)	(119)	(150)
Pressure				
at boiler flue outlet	pa	70	70	70
at rated input	"w.c.	0.28	0.28	0.28
Standby loss at maximun input and steady state condition 180° F/80° F				
(82° C/27° C) supply and return water temperature	BTU/h (W)	862 (252)	1053 (308)	1334 (391)
	%	0.13	0.12	0.12
At boiler water temperature 158° F (70° C) [room temperature 68° F (20° C)]	BTU/h (W)	3315 (971)	3512 (1029)	4448 (1303)
	%	0.5	0.4	0.4

Dimensions

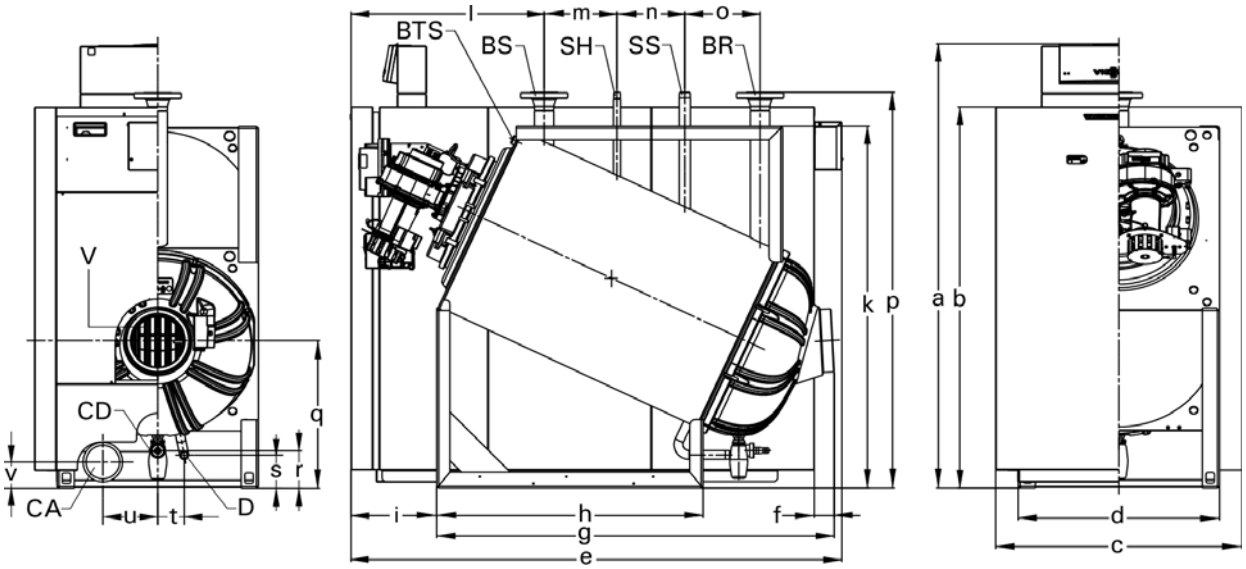

Legend

V	Vent pipe connection
D	Drain
CD	Condensate drain
BR	Boiler return
BTS	Boiler water temperature sensor
BS	Boiler supply
SH	Female connection NPT ½ in. for pressure gage
CA	Combustion air pipe connection
SS	Safety supply; pressure relief valve, air vent, low water cut-off

Dimensions

Model CM2			186	246	311
a*		in. (mm)	66 (1676)	66 (1676)	66 (1676)
b*		in. (mm)	56½ (1438)	56½ (1438)	56½ (1438)
c		in. (mm)	36½ (930)	36½ (930)	36½ (930)
d		in. (mm)	30 (760)	30 (760)	30 (760)
e		in. (mm)	73 (1852)	73 (1852)	73 (1852)
f	(flue pipe projection at the back)	in. (mm)	3 (75)	3 (75)	3 (75)
g		in. (mm)	59 (1500)	59 (1500)	59 (1500)
h	(foot length)	in. (mm)	39½ (1005)	39½ (1005)	39½ (1005)
i	(distance from front face of the cover to the front supporting foot)	in. (mm)	12¾ (323)	12¾ (323)	12¾ (323)
k*		in. (mm)	53¾ (1365)	53¾ (1365)	53¾ (1365)
l	(distance from the front face of the cover to the centre of the boiler supply connection)	in. (mm)	28¾ (729)	28¾ (729)	28¾ (729)
m		in. (mm)	10¾ (275)	10¾ (275)	10¾ (275)
n		in. (mm)	10 (255)	10 (255)	10 (255)
o		in. (mm)	11¼ (284)	11¼ (284	11¼ (284
p*		in. (mm)	58¾ (1493)	58¾ (1493)	58¾ (1493)
q*		in. (mm)	22 (558)	22 (558)	22 (558)
r*		in. (mm)	5½ (142)	5½ (142)	5½ (142)
s*		in. (mm)	5 (126)	5 (126)	5 (126)
t		in. (mm)	4 (100)	4 (100)	4 (100)
u		in. (mm)	8 (207)	8 (207)	8 (207)
v		in. (mm)	4 (100)	4 (100)	4 (100)

* Add 1⅝ in. (40 mm) when using seismic mounts (optional accessory).

5608 012 - 02

Recommended Minimum Service Clearances

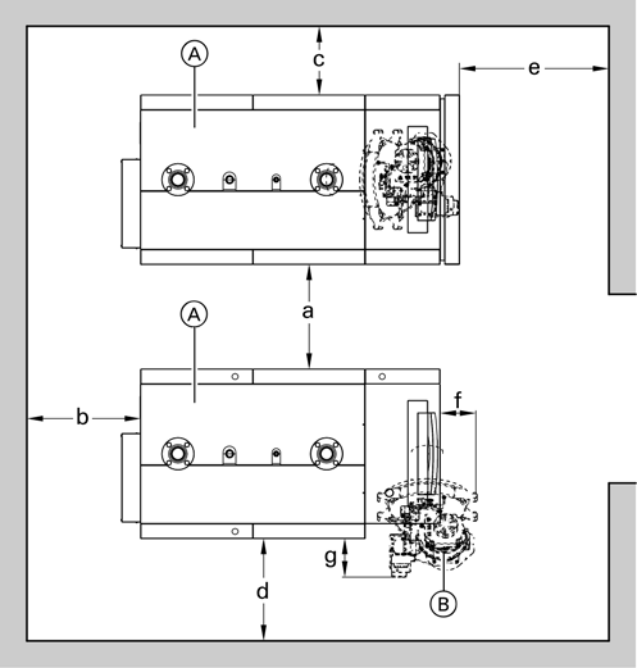

To enable convenient installation and maintenance, observe the stated clearance dimensions. Maintain the minimum clearances where space is tight.

In the delivered condition, the boiler door hinge bracket is factory installed on the left side of the door. If required, the boiler door hinge bracket can be reinstalled on the right side of the door.

CM2		186	246	311
a *1	in. (mm)	20 (500)	20 (500)	20 (500)
b *2	in. (mm)	30 (760)	30 (760)	30 (760)
c	in. (mm)	20 (500)	20 (500)	20 (500)
d	in. (mm)	20 (500)	20 (500)	20 (500)
e	in. (mm)	24 (600)	24 (600)	24 (600)
f	in. (mm)	11 (280)	11 (280)	11 (280)
g	in. (mm)	15½ (395)	15½ (395)	15½ (395)

Legend

Ⓐ Boiler

Ⓑ Burner

*1 Clearance may be reduced to zero in multi-boiler installations, provided the side panel removal is not required.

Note: The burner, boiler control, condensate trap, venting and heat exchanger are still fully accessible from the front and rear of the boiler.

*2 Clearance for vent pipe installation.

Mechanical room

- Avoid air contamination by halogenated hydrocarbons (e.g. as in sprays, paints, solvents and cleaning agents)
- Avoid very dusty conditions
- Avoid high levels of humidity
- Protect against frost and ensure good ventilation, otherwise the system may suffer faults and damage. In rooms where air contamination from halogenated hydrocarbons is to be expected, operate the boiler only in balanced flue mode.

Minimum clearances to combustibles

Boiler model CM2	186	246	311
Top	0		
Sides	0		
Flue	As per vent manufacturer's specifications		
Front	0		
Floor	combustible		

Flow Rate

Pressure drop (primary circuit)

The Vitocrossal 200 is only suitable for fully pumped hot water heating systems.

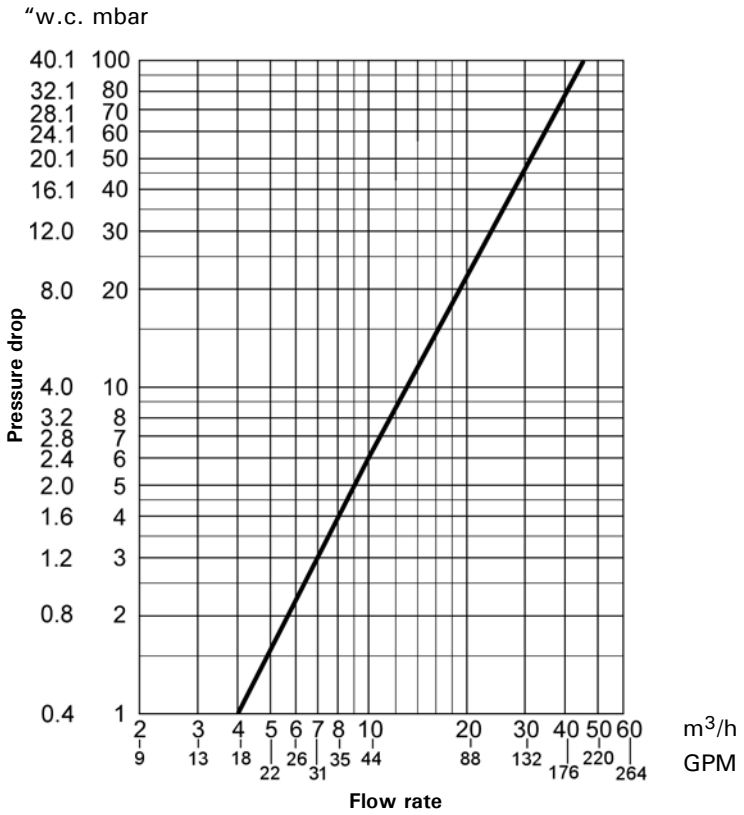

Recommended Flow Rates CM2

Boiler model		186	246	311
20° F △t	GPM	63	84	106
40° F △t	GPM	31	42	53
11° C △t	m^3/h	14.3	19.07	24.07
22° C △t	m^3/h	7.04	9.53	12.04

△t = temperature difference
This boiler does not require a flow switch.

Cylinder Burner

Specifications				
Boiler Model CM2		**186**	**246**	**311**
Product ID		see boiler		
Voltage	V	120	120	120
Frequency	Hz	60	60	60
Power consumption				
at max. input	W	225	278	368
at min. input	W	51	52	67
Version		modulating		
Dimensions				
Length	in. (mm)	30.3 (770)	30.3 (770)	30.3 (770)
Width	in. (mm)	21.5 (546)	21.5 (546)	21.5 (546)
Height	in. (mm)	18.9 (482)	18.9 (482)	18.9 (482)
Weight				
Burner only	lb. (kg)	61.0 (27.6)	64.5 (29.3)	64.5 (29.3)
Burner package (with kits, flanges and mounting hardware)	lb. (kg)	93 (42.2)	100.5 (45.5)	100.5 (45.5)
Min. gas supply pressure				
Natural gas	"w.c.	4	4	4
Liquid propane gas	"w.c.	10	10	10
Max. gas supply pressure				
Natural gas	"w.c.	14	14	14
Liquid propane gas	"w.c.	14	14	14
Gas connection	NPT	1	1¼	1¼

Cylinder Radiant Burner *(continued)*

CM2 pre-mix cylinder burner 186/246/311

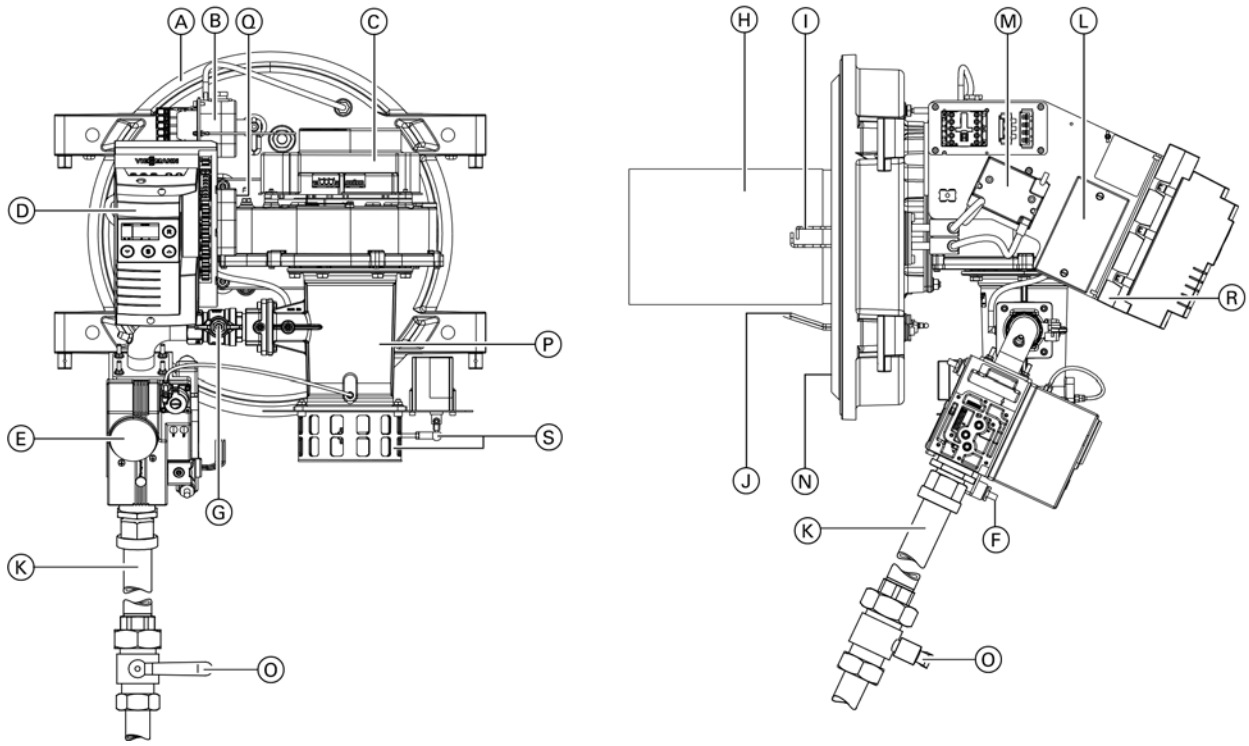

Legend

Ⓐ Boiler door
Ⓑ Air pressure switch 1
Ⓒ Fan
Ⓓ Burner display and programming unit
Ⓔ Gas valve with gas pressure switch
Ⓕ Gas supply pipe
Ⓖ Burner test firing valve
Ⓗ Cylinder burner assembly
Ⓘ Ignition electrodes

Note: Solenoid valve (choke valve) for CM2 model 186 (not shown).

Ⓙ Ionization electrode
Ⓚ Gas pipe
Ⓛ AC-EMI suppresion filter device
Ⓜ Ignition unit
Ⓝ Thermal insulation block
Ⓞ Manual shut-off valve
Ⓟ Venturi mixing pipe
Ⓠ Air pressure switch 2
Ⓡ Burner control sub-base
Ⓢ Servomotor and burner inlet damper (for models 246 / 311)

5608 012 - 02

Standard Equipment

Boiler body with fitted mating ANSI flanges and gaskets to all connectors and fitted protective crate, plus flue gas collector collar.

1	thermal insulation
1	cylinder burner
1	boiler control unit (see boiler control alternatives below)
1	boiler coding card
1	technical documentation

Installation fittings for standard equipment includes:

- low water cut-off
- safety header (c/w 75 psig pressure relief valve, air vent and pressure gage)
- drain valve
- product documentation
- combustion air intake kit
- NG to LPG conversion kit

Boiler Control Alternatives

For single boiler systems

- without Vitocontrol control panel

  Vitotronic 100 (type GC1)

  for constant boiler water temperature or outdoor reset mode in conjunction with an external control unit (BMS).

  Vitotronic 300 (type GW2)

  for modulating boiler water temperature with mixing valve control for a maximum of two heating circuits with mixing valve.

- with Vitocontrol control panel

  Vitotronic 100 (type GC1)
  and
  Vitocontrol-C, CM2 control panel

  with Vitotronic (300 MW1S) for outdoor reset mode and mixing valve control for a maximum of 2 heating circuits with mixing valve and additional Vitotronic 050, type HK1S or HK3S for 1 or up to 3 heating circuits with mixing valve.

For multi-boiler system (up to 4 boilers)

- without Vitocontrol control panel
  Vitotronic 100 (type GC1) **and LON module**
  for modulating boiler water temperature in conjunction with an external control unit (BMS).

- with Vitocontrol control panel

  Vitotronic 100 (type GC1) **and LON module**
  for modulating boiler water temperature for each boiler of the multi-boiler system and

  Vitocontrol-S, CM2 control panel
  with Vitotronic (300K MW1) for multi-boiler system, outdoor reset mode and mixing valve control for a maximum of 2 heating circuits with mixing valve and additional Vitotronic 050, type HK1S or HK3S for 1 or up to 3 heating circuits with mixing valve.

For single-boiler or multiple-boiler installations

Custom control panels for residential or commercial applications are designed and manufactured by Viessmann to suit any customer's specific requirements. Custom control panels can have features such as pool heating, hot tub heating, snow melting, telephone tie-in, integration with Building Management Systems, as well as several other functions. Please inquire.

System Design Considerations

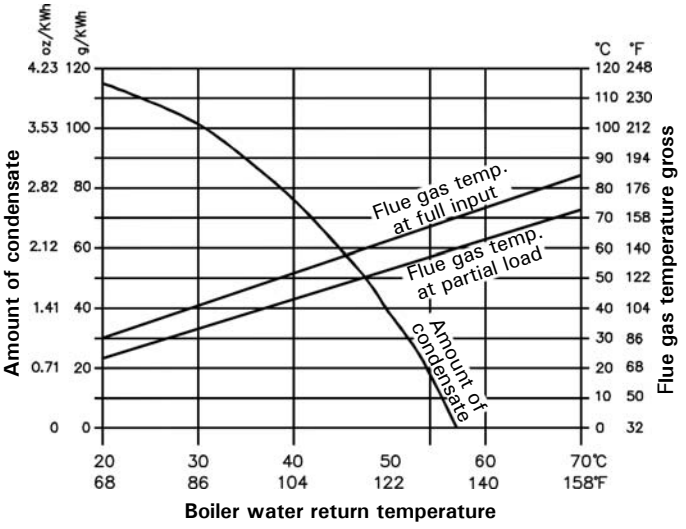

Note: The 'amount of condensate" and the "flue gas temperature gross" graphs are independent of each other.

Condensate and its disposal

During the operation of the boiler, the amount of condensate to be expected can be read from the above diagram.

The values given are approximate amounts occurring under practical conditions. Not included in the diagram is the amount of condensate occurring in the vent pipe and chimney system. The condensate from the chimney system can be collected together with the condensate from the heating boiler and be disposed of into a floor drain. The condensate will be between 3 and 4 on the pH scale. If local building requirements demand neutralizing the condensate before disposal, contact Viessmann Manufacturing Company Inc. for a correctly sized neutralization tank. The treated condensate will show pH values of between 6.5 and 9 and can then be disposed of into the waste water system.

Design notes regarding draining condensate

The condensate drain to the sewer connection must be able to be inspected.
Route it with a gradient and equip the pipe with a P-trap; also provide suitable facilities for taking samples.
The bottom drain should be located below the anti-flooding level of the flue gas collector box.

Condensate drains must only be made from corrosion resistant materials (e.g. fibre reinforced hoses). Never use any galvanized materials or those containing copper or black iron for pipes, connectors, etc.
Install a P-trap in the condensate drain to prevent flue gases from escaping.

Ensure that the domestic drainage systems are made from materials which are resistant to acidic condensate such as:

- Stoneware pipes
- Hard PVC pipes
- PVC pipes
- PE-HD pipes
- PP(s) pipes
- ABS/ASA pipes
- Stainless steel pipes
- Borosilicate pipes

Venting options

PP(s) (Polypropylene) flue gas/fresh air system for room air independent operation (sealed combustion), and PP(s) flue gas for room air dependent operation are tested to ANSI Z21.13 - CSA 4.9 - 2000 standards and are certified together with the Vitocrossal 200 boiler as a constructional unit.

The Vitocrossal 200 boiler may also be vented using an special stainless steel, single-wall, (UL listed for category IV).

The boiler may be vented horizontally through the side wall or vertically through the roof.

For a more detailed description of the direct vent and single-wall vent system, please refer to the Vitocrossal 200 Installation Instructions venting section.

Use ULC S-636 / UL 1738 certified for category IV boilers. The following vent system suppliers may be contacted for assistance in designing the appropriate PP(s) venting system for Vitocrossal 200 CM2 boilers.

M&G / Duravent
Tel. 800-835-4429
Tel. 518-649-9700
Fax: 518-463-5271
Email: sales@duravent.com
Web: www.duravent.com

Centrotherm InnoFlue
Eco Systems. L.L.C.
Tel. (877) 434-3432
Fax. (518) 618-3166
Email: info@centrotherm.us.com
Web: www.centrotherm.us.com

System Design Considerations *(continued)*

Use ULC S-636 / UL 1738 certified for category IV boilers. The following vent system suppliers may be contacted for assistance in designing the appropriate stainless steel venting system for Vitocrossal 200 CM2 boilers.

M&G / Duravent Tel. 800-835-4429 Tel. 518-649-9700 Fax: 518-463-5271 Email: sales@duravent.com Web: www.duravent.com	**ICC - Industrial Chimney Co.** 400 J-F Kennedy, St-Jerome, Quebec Canada, J7Y 4B7 Tel. 514-565-6336 Fax: 514-565-6519 Email: sales@ICC-RSF.com
Selkirk Canada Corporation 375 Green Road Stoney Creek, ON L8E 4A5 Tel.: (905) 662-6600 Fax: (905) 662-5352 (US) 1-800-992-8368 (Canada) 1-888-735-5475 Email: info@selkirkcorp.com Web: www.selkirkchimney.com	**Novaflex** 1-20 East Pearce St., Richmond Hill, Ontario, Canada, L4B 1B7 Tel. 905-731-9411 Email: sales@flexmaster.com
Wesmech Technical Sales 50 Ronson Drive, Suite 160 Toronto, ON M9W 1B3 Tel.: (416) 251-8990 Fax: (416) 251-8900 1-800-613-3789 Email: info@wesmechtech.com Web: www.wesmechtech.com	**Van-Packer Co. Inc.** 302 Mill Street PO Box 307 Buda, IL 61314 Tel.: (309) 895-2311 Fax: (309) 895-3891 1-888-877-8225 Email: vpstack@theramp.net Web:www.vpstack.com
Security Chimneys International Ltd. 2125 Rue Monterey, Laval, Quebec H7L 3T6 Tel. 450-973-9999 (US) 1-800-361-4909 (Canada) 1-800-667-3387 Fax: 450-973-2222 Email: infoeng@securitychimneys.com Web: www.securitychimneys.com	**Enervex Inc. (formerly Exhausto)** Tel: 770-587-3238 Fax: 770-587-4731 (800) 225-2923 Email: info@exhausto.com Web:www.vpstack.com
Centrotherm InnoFlue Eco Systems. L.L.C. Tel. (877) 434-3432 Fax. (518) 618-3166 Email: info@centrotherm.us.com Web: www.centrotherm.us.com	

Combustion air supply

The boiler must not be located in areas or rooms where chemicals containing chlorine, bromine, fluorine, or other corrosive chemicals are stored. Examples include bleach, refrigerants, paint, paint thinner, hair spray, cleaning solvents, water softener salt, etc. The combustion air must not be contaminated with any amount of the above mentioned chemicals.

Boiler should never be installed in areas where excessive dust, high humidity, or risk of frost exist. Ensure adequate ventilation and supply of fresh combustion air.

Consult your local Viessmann sales representative with uncertainties in regard to a suitable boiler installation location.

This boiler/burner unit needs clean fresh air for safe operation. Provisions for combustion and ventilation air must be made at time of installation. For gas or propane installations, use the “Natural Gas Installation Code CAN/CSA-B149.1 or B149.2” (Canada), or “National Fuel Gas Code ANSI Z223.1” (USA), and/or provisions of local codes.

The sizing methods outlined in the aforementioned codes should be used when installing a round duct to supply combustion air from the outside.

System layout

The boiler water temperature limit is factory set to 167° F (75° C).

The boiler water temperature limit can be increased by altering the adjustable high limit (AHL) to increase the supply water temperature.

To minimize piping losses of the system, however, Viessmann recommends that the radiation and domestic hot water production in the system be designed for a 158° F (70° C) boiler supply water temperature.

Warranty

Our warranty does not cover damages resulting from the following:

- Operation with contaminated fill and supplementary feed water
- Operation with contaminated combustion air
- Exposing the boiler to pressures and temperatures higher than its certified rating

See warranty sheet for details.

System Design Considerations *(continued)*

Water quality

Treatment for boiler feed water should be considered in areas with known problems, such as where a high mineral content and hardness exist. In areas where freezing might occur, it recommended that an antifreeze be added to the system water for protection against freezing. Please adhere to the specifications given by the antifreeze manufacturer. Do not use automotive silicate-based antifreeze. Please observe that an antifreeze/water mixture may require a back flow preventer within the automatic water feed and influence components such as diaphragm expansion tanks, radiation, etc. A 40% antifreeze content will provide freeze-up protection to -10° F (-23° C). Do not exceed 50% antifreeze mix ratio and do not use antifreeze other than specifically made for hot water heating systems.

Total output (MBH)	Total Hardness (ppm as ca CO_3)
> 1 Total ≤ 680	≤ 200
> 680 to ≤ 255	≤ 150

The pH value of the heating water should be between 8.2 and 9.5

Oxygen diffusion barrier under floor tubing

The boiler warranty does not cover pressure vessel failure resulting from corrosion caused by the use of underfloor plastic tubing without an oxygen diffusion barrier. Such systems without oxygen diffusion barrier must have the tubing separated from the boiler with a heat exchanger. Viessmann always recommends the use of underfloor plastic tubing with an oxygen diffusion barrier.

Boiler/burner start-up

Vitocrossal 200, CM2 boilers with Viessmann cylinder burners does not require start-up by Viessmann.

Sound attenuation

Please consult a professional engineer who is specialized in noise attenuation for advice.

The burner/boiler systems, circulation pumps and other auxiliary equipment used in heating systems generate noise.

This noise is transferred from the boiler room via floorboards, ceiling and walls to neighboring rooms and via the flue gas system as well as the ventilation air and exhaust air apertures into other rooms and into the open, where they may cause a nuisance.

To avoid this from happening, additional protective measures may be required which should be considered at the design stage.

Subsequent measures to reduce noise nuisance frequently require extensive effort and expenditure.

Airborne noise attenuation

Frequently, modern boilers are equipped with silencer hoods or sound insulated ventilation air inlet housings.

For larger systems, it may be necessary to route the ventilation air through a sound-insulated channel, in order to avoid a noise nuisance outside the building.
Flue gas silencers are generally only required where higher noise protection measures are called for. Whether or not a flue gas silencer is required can be predicted only with some difficulties, because of the complexity of the creation and propagation of flame noise, the interaction between the burner, boiler and the flue gas system as well as the operating mode (flue gas system operating with positive or negative pressure).

It is advisable, therefore, to assess the noise emission into the neighborhood and to consider the sound pressure level measured at the flue gas system outlet. It should be considered at the planning stage whether silencers might become necessary later.

In planning for its possible use, it is important that sufficient space for the flue gas silencer is available behind the boiler. Good engineering practice mandates that the exhaust pressure drop of the silencer be included in the vent size calculation.

Anti-vibration measures

Anti-vibration supports can be field supplied as an economical and effective solution to combat noise generated.
When sizing such supports, take the entire operating weight of the boiler system and, when using longitudinal anti-vibration brackets, the condition of the supporting surface into consideration.

Effective anti-vibration measures are particularly important when installing boilers into an attic. Flexible couplings may be used to physically separate the combustion equipment from the building.

These should be installed into the boiler flow, return and safety pipe and as near as possible to the boiler.
Also insulate any braces or hanging arrangements, if installed, against sound/vibration transmission to the building.

Printed on environmentally friendly (recycled and recyclable) paper.

Technical information subject to change without notice.

Viessmann Manufacturing Company Inc.
750 McMurray Road
Waterloo, Ontario • N2V 2G5 • Canada
TechInfo Line 1-888-484-8643
1-800-387-7373 • Fax (519) 885-0887
www.viessmann.ca • info@viessmann.ca

Viessmann Manufacturing Company (U.S.) Inc.
45 Access Road
Warwick, Rhode Island • 02886 • USA
TechInfo Line 1-888-484-8643
1-800-288-0667 • Fax (401) 732-0590
www.viessmann-us.com • info@viessmann-us.com

5608 012 - 02